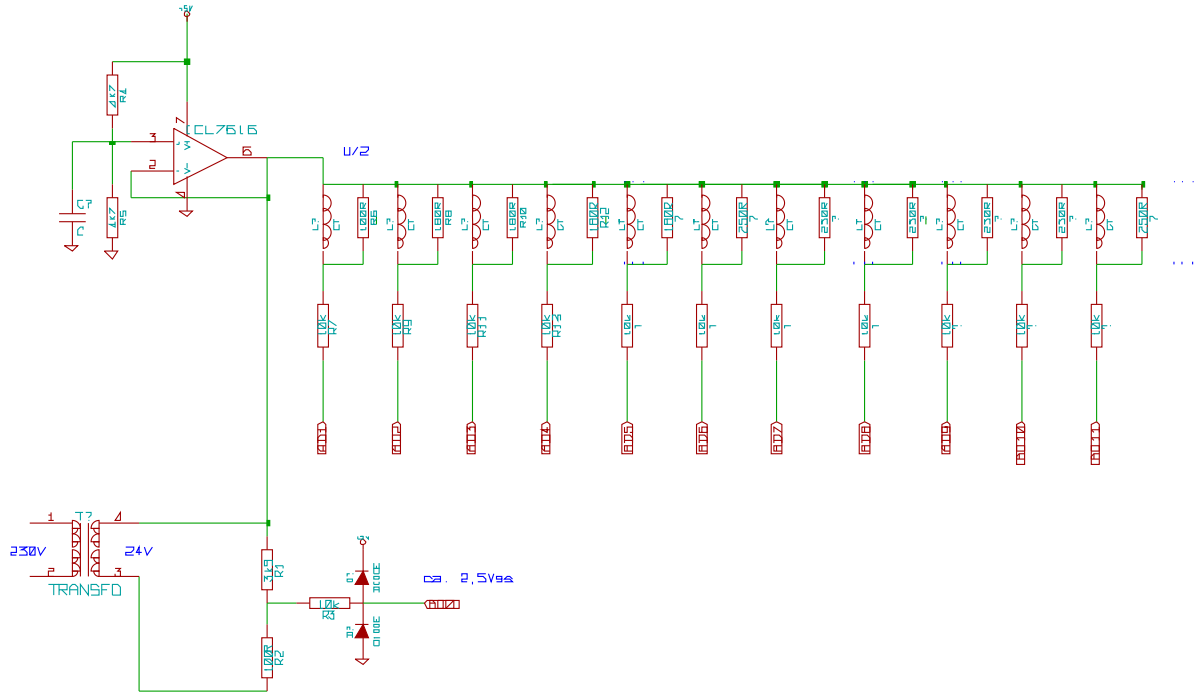

File: powermonitor.sch		
Sheet: /		
Title:		
Size: A4	Date: 23 mar 2010	Rev:
KiCad E.D.A. EESchema [20080825c]		Id: 1/1